Ten47

S-BOX

Powerline Sequential Box

Contents

Introduction	3
Features	4
Operating Instructions	8
M12 Connector	10
Characteristics	11
Electrical Installation	11
Dimensions	12
Mounting Instructions	16
Part Number Explanation	17
Panel Drain Connectors	18
Panel Source Connectors	19
Accessories	20
Reference Data for Cable Selection	21
Crimping Tool	22
Removal Tool	23
Maintenance	24
Special Version	25
Safety	26

Introduction

Sequential Box

Powerline 500A / 750A Sequential Box:

Single Pole Power Connectors have become widely adopted in a diverse range of applications and industries.

S-BOX distribution box has been developed to guarantee greater safety in use. The connectors can only be inserted in sequence, on mating the final connector a non standard key locks the connectors in place.

The main features are:

- Polarisation system to prevent connection errors.
- Up to 750 A, 1000 V.
- From 35 mm^2 to 300 mm^2 wire section.
- IP67 when mated (according to EN 60529).
- Finger Protected IP2X: male and female contacts.
- Multi-louver contact system.

Applications:

- Power distribution
- Utilities
- Electric Vehicles
- Railway Equipment
- Mobile Generators
- Loadbanks
- Back-up Power Systems

Features and Benefits:

- Sequential connecting ensures Ground/Earth is connected first.
- Colour coding for ease of use.
- Mechanical keying to prevent incorrect mating of phases or earth and neutral. The key remains the same regardless of the colour coding so Line 1 US which is black mates with Line 1 EU which is brown.
- The metal box guarantees greater strength to mechanical shocks and resistance to mechanical shock and vibration.

Safety notice: S-Box should only be installed and operated by suitably qualified persons.

Features

S-BOX has been developed for use in high current installations in order to avoid disconnecting under load.
Connectors are keyed and must be connected in sequence from Earth through to Line 3. The connectors can be locked and the power connected to a micro switch to ensure power flows only when everything is properly connected.

The S-BOX has many safety features when compared to standard panel connectors:

- Sequential connecting ensures ground is connected first and the non standard key locks the connectors to prevent unmating under load.
- All connectors are “keyed” to avoid cross mating.
- An M12 connector can be activated or de-activated on the locking of the non standard triangular key.
- Colour coded to suit international standard.

Features

Finger protected IP2X: drain and source contacts.

Features

The S-BOX can be supplied with different contact types:

- Threaded Post/Hole Contacts up to 150mm² - 500A / up to 300mm² - 750A
- Crimp Contacts up to 300mm² - 750A
- Screw Terminal Contacts up to 150mm² - 500A

Rated current: 500A (silver plated brass contacts) - 750A (silver plated copper contacts)

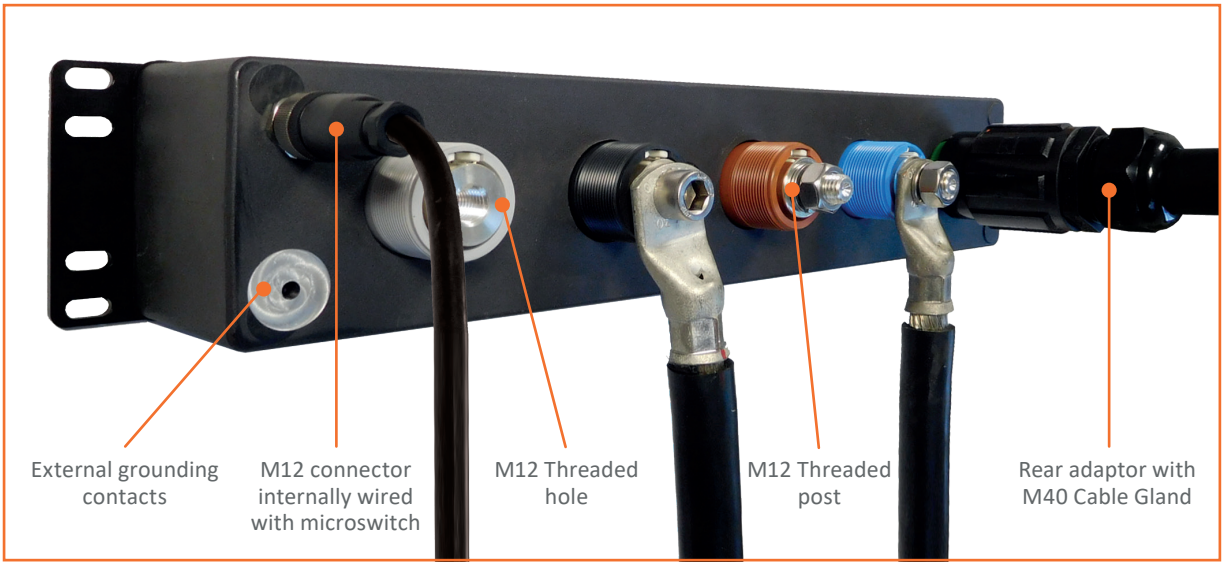

Features

An optional backshell and cable gland gives IP67 protection at the rear (for use with screw terminal or crimp contacts).

The S-BOX may be mounted into standard modular 19” rack systems or in panel mounts.

Using sealing caps does not alter the height. One box can be mounted directly above another.

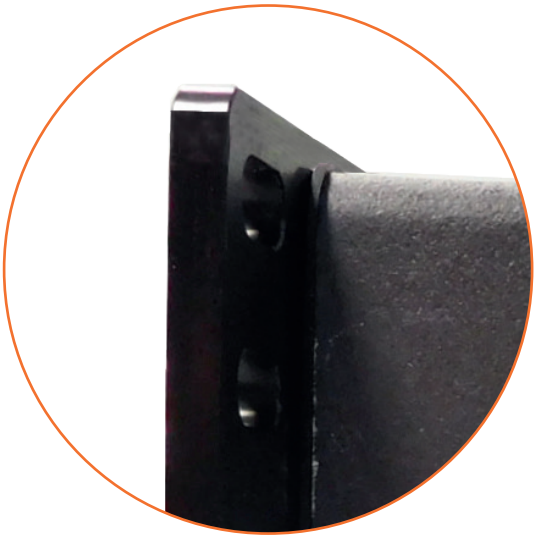

Operating Instructions

Connection of Sequential Box connectors is made sequentially, starting with Ground / Earth connection (Green) and working to the right.

- Insert the Ground (Green) connector, aligning the Plug connector arrow on the label of the connector in a 12 o'clock position. Fully insert the connector until it it bottoms out and turn until the connector stops.
- Repeat for the Neutral connector, followed in order by L1, L2, and L3.
- Lock the connectors, using the triangular drive key provided, the lock is situated adjacent to the L3 connection.
- Remove the key. All connectors are now locked in place and can be removed only when the box is unlocked.
- The power must be turned off and reverse the above procedure, to remove the connectors.

1

Insert and turn in sequence

2

The last connector locks the previous one

Operating Instructions

3 Lock the connectors and switch on the microswitch by locking using the triangular key.

You can use the Powerline connectors and the Powerline QC connectors as well as compatible versions.

M12 Connector

3 Pole M12 is located on the rear of the unit to provide a remote monitoring function of equipment status but it cannot be the only safety guarantee.

The M12 connector installed on the rear is connected to a microswitch inside the unit, the microswitch is activated using the triangular key.

The connector body has 4 poles with 3 contacts wired to the switch.
Using 3 poles, the cable connector can be wired to suit your requirements, either “Normally Open” or “Normally Closed” or both.

The microswitch cannot be used to switch off the voltage power.

Do not disconnect under load.

Contact Position	ON	OFF
1	Common	Common
2	Open	Closed
3	Closed	Open
4	Not Used	Not Used

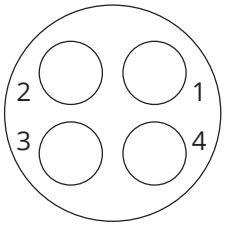

Characteristics

Current rating	500A or 750A (check label for rating)
Voltage rating	1000V
Microswitch operating voltage	250Vac / 30Vdc max.
Microswitch current rating	4A (Resistive Load) / 0,5A (Lamp Load)
Operating temperature	-30°C to +85°C
Environmental protection	IP67 (when mated connectors and locked) IP65 (when caps are closed) IP2X (finger protected)
Sequential Box weight	Unit with rubber caps: 4.70 Kg approx Unit without caps: 4.35 Kg approx
Flammability rating	UL94-V0
Endurance	500 connection cycles

Electrical Installation

The connection to back of the unit is:

- Threaded Post/Hole Contacts up to 150mm^2 - 500A / up to 300mm^2 - 750A.
- Crimp Contacts up to 300mm^2 - 750A.
- Screw Terminal Contacts up to 150mm^2 - 500A

Use the connectors and connected cables within their electrical and environmental limits:

- Each position is marked on the back of the box, E (Ground), N, L1, L2, & L3 (or +,-).
- The threaded post contacts have a spring washer and nut that should be tightened to a torque of 30Nm max.
- The screw terminal contacts should be tightened to a torque of 12Nm max.
- Cable connections: Threaded Post/Hole on the rear of the unit are for connecting power cables fitted with cable lugs.
- It is recommended that insulated spanners and correct tools are used when making the connections and installations.
- The shell of S-Box must be connected to the rear ground connection (M6).
- After wiring it is necessary to verify the continuity of the protective earth connections.

Dimensions

Panel Drain Connectors

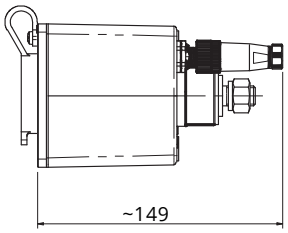

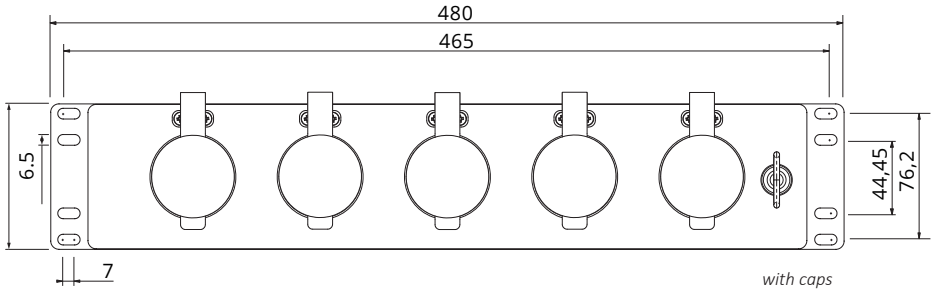

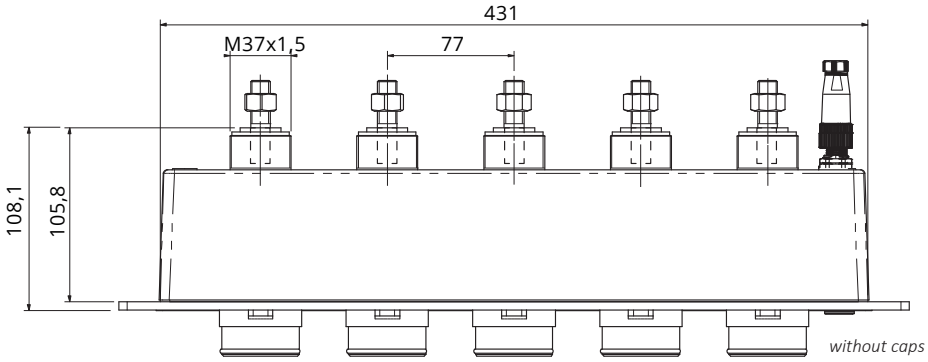

M12 Threaded hole version

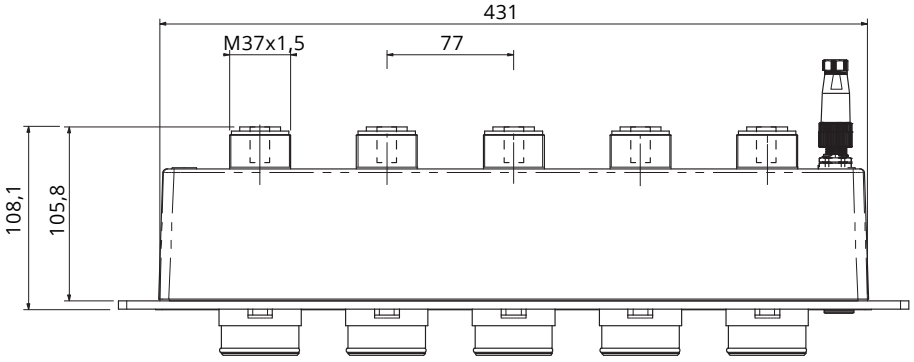

M12 Threaded post version

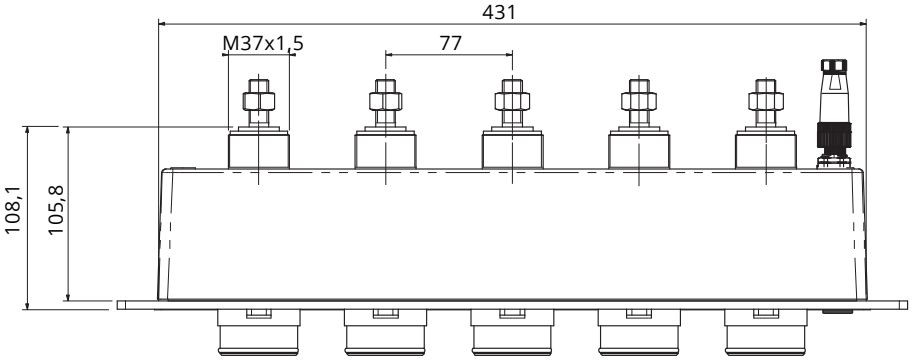

Dimensions in mm

Dimensions

Panel Source Connectors

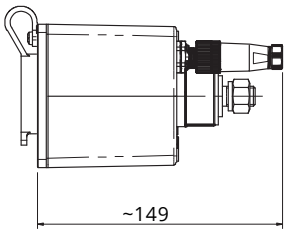

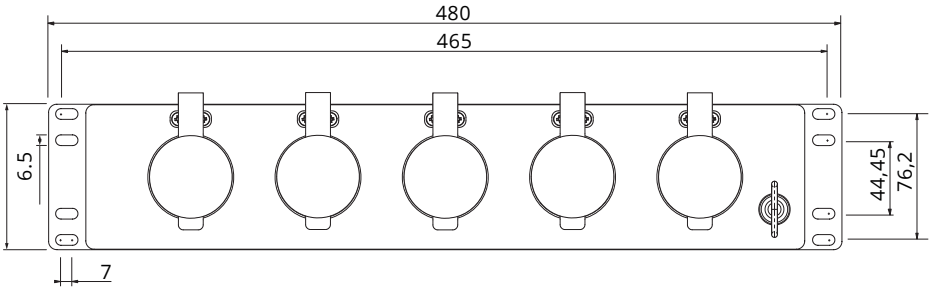

with caps

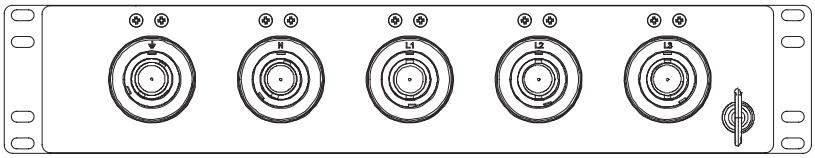

without caps

M12 Threaded hole version

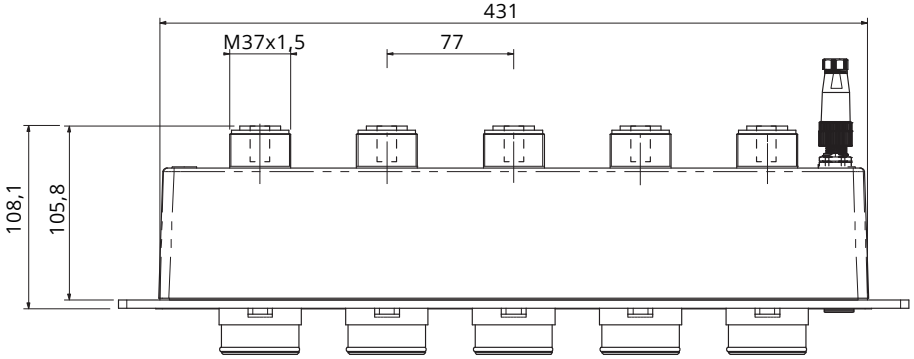

M12 Threaded post version

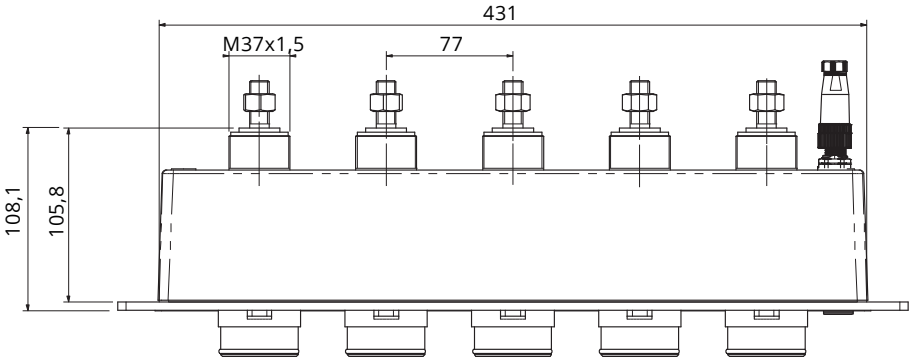

Dimensions in mm

Dimensions - Flanged Version

Panel Drain Connectors

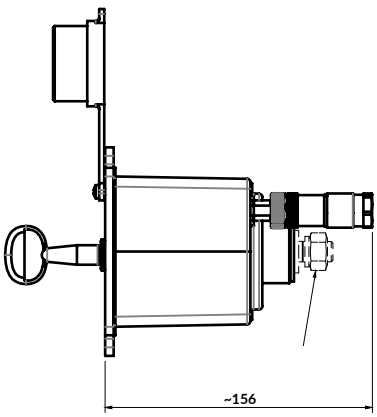

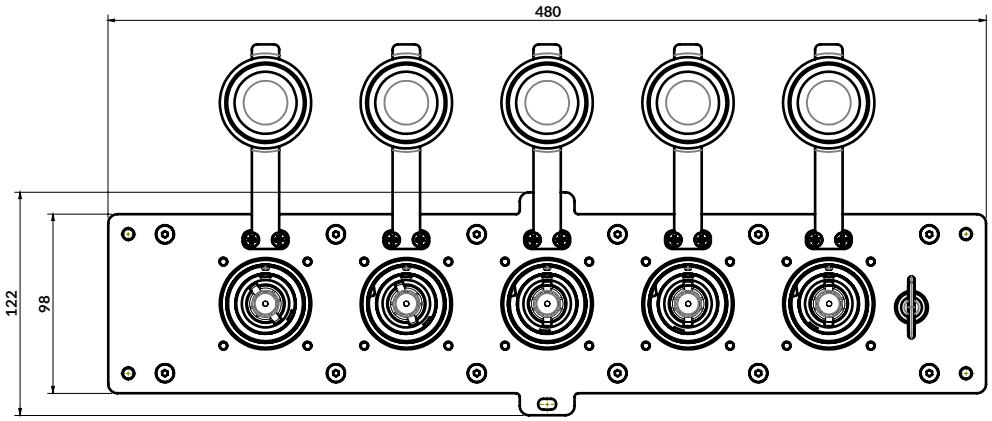

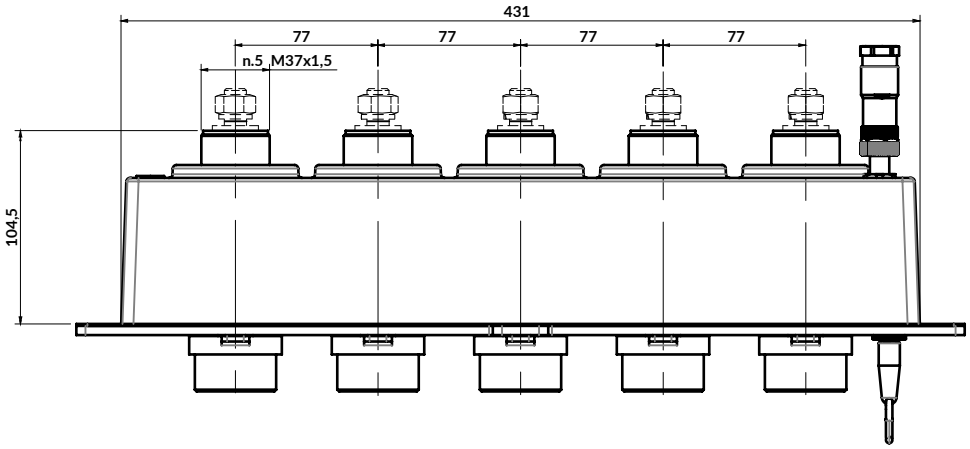

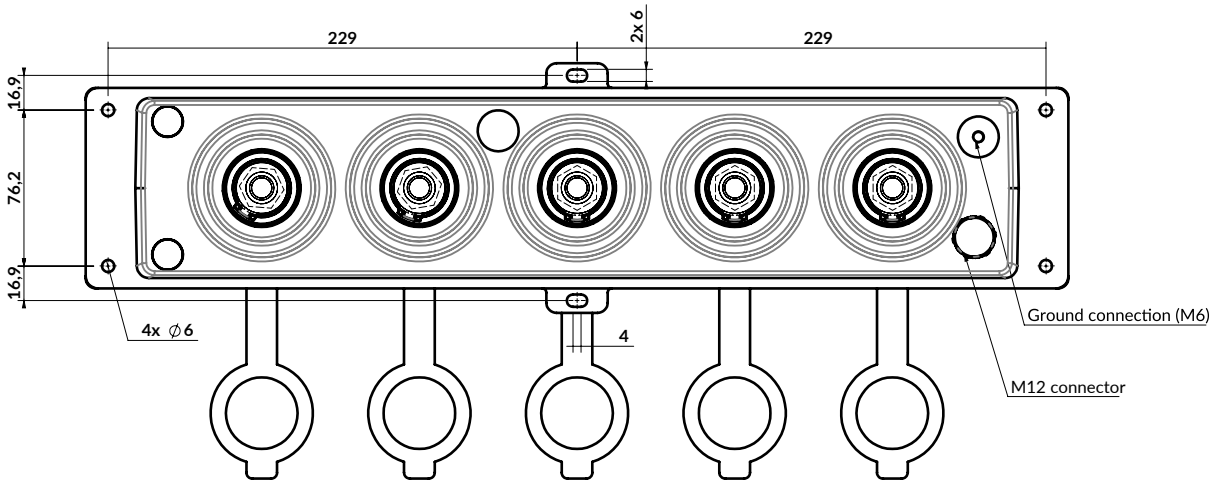

Dimensions - Flanged Version

Panel Source Connectors

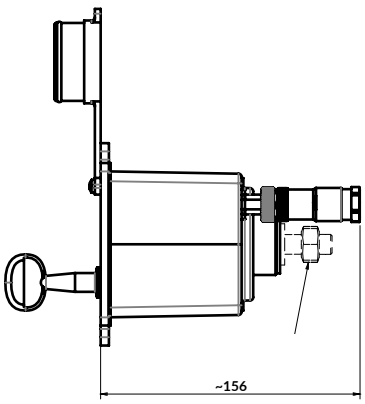

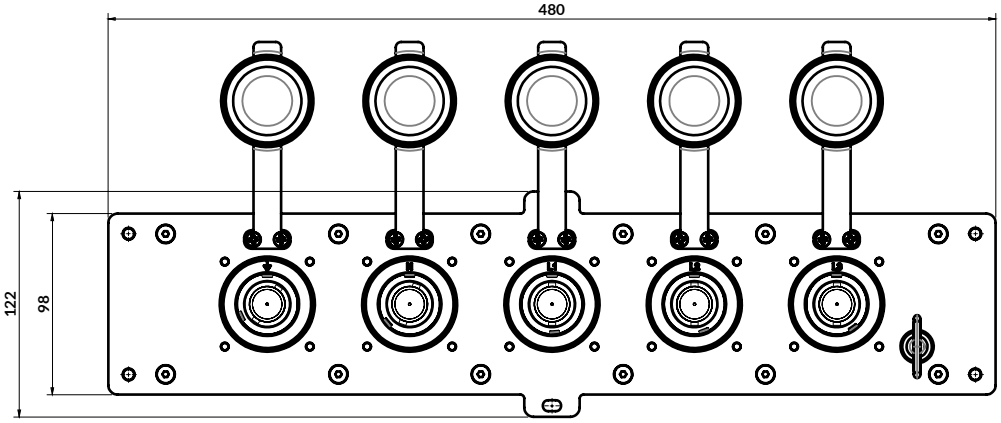

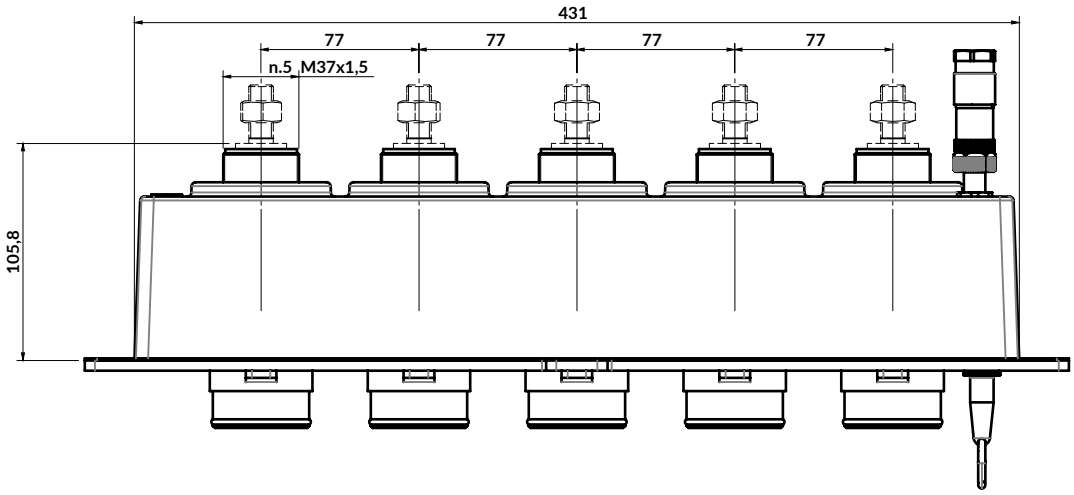

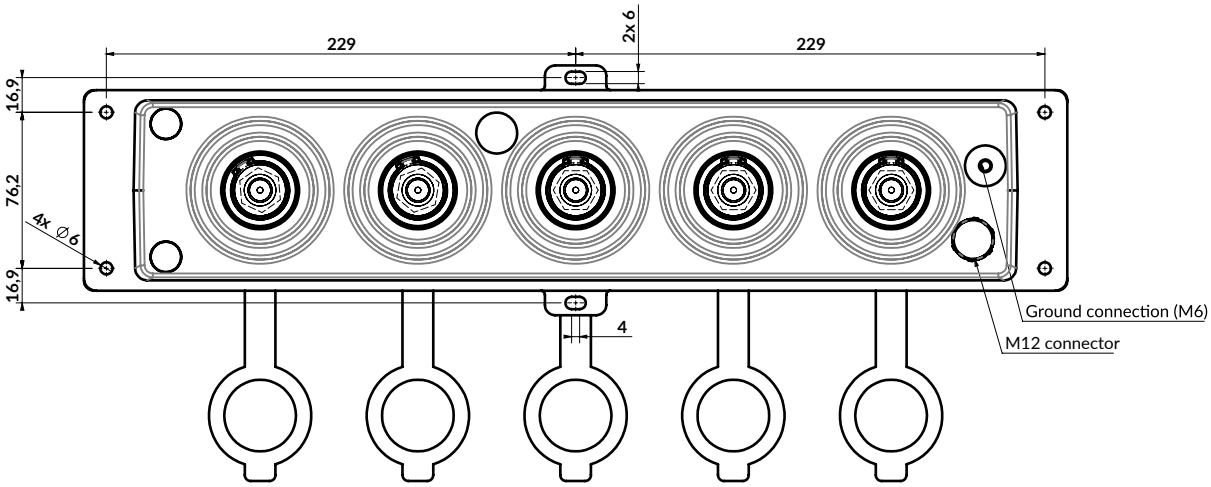

Mounting Instructions

Attention: ensure the unit is adequately supported during mounting / dismounting and in normal use.

It is recommended that M6 screws/bolts and flat washers are used, and tightened to a reccommended torque (check it with the screw/bolt manufacturer).

PANEL CUT OUT:

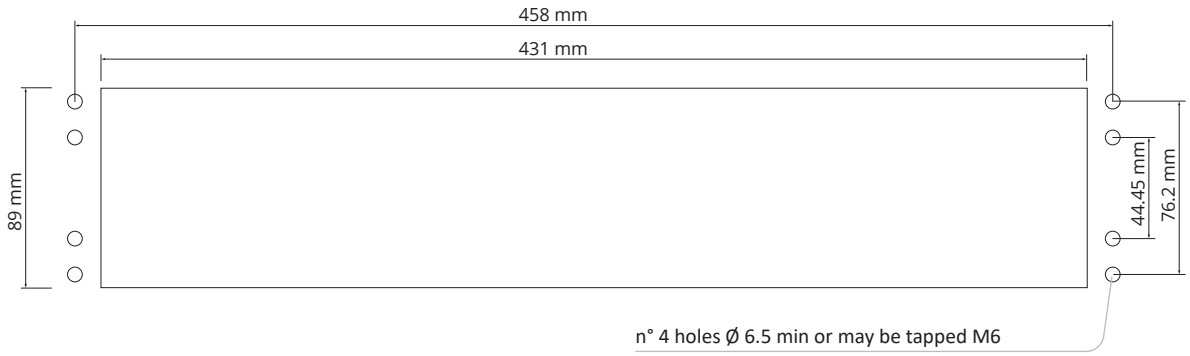

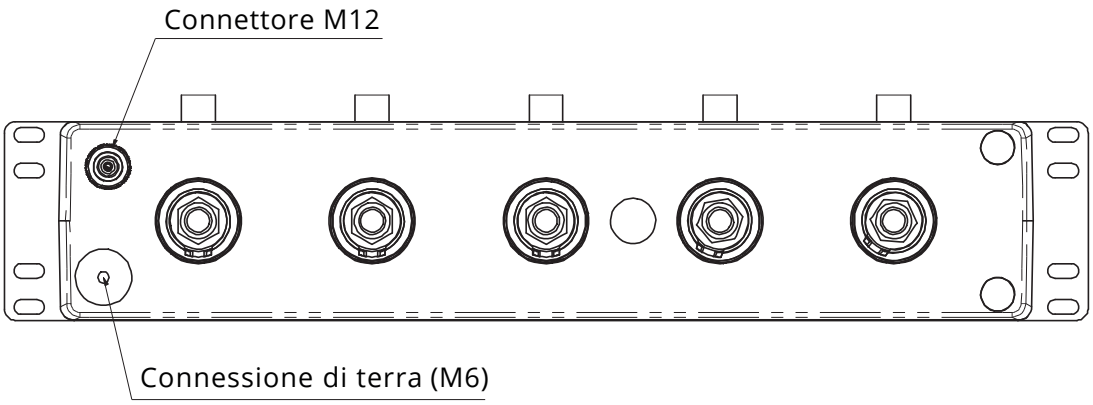

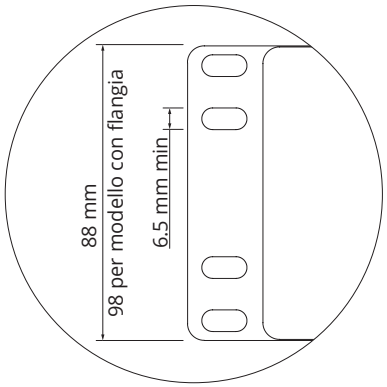

Part number explanation

PSB	F	7M	EU	C	MT

Series Code	
Single Pole Power connectors - Sequential Box	**PSB**

Connector Type	
Panel Source	**F**
Panel Drain	**M**

Contact Termination	
Threaded hole - 500A	**5F**
Threaded hole - 750A	**7F**
Screw terminal - 500A up to 150mm²	120S
Crimp contacts - 750A 185mm²	185C
Crimp contacts - 750A 240mm²	240C
Crimp contacts - 750A 300mm²	300C
M12 Threaded post - 500A	5M
M12 Threaded post - 750A	7M

Insulator Colour	
UK & Europe	**EU**
Commonwealth	CW
USA	US
Australia	AU

Caps	
With rubber caps	**C**
Without caps	-

Mounting Type	
Modular 19” rack version	**-**
Flanged version	MT

COLOUR CODING	Earth	Neutral	Line 1	Line 2	Line 3
UK & Europe	Green	Blue	Brown	Black	Grey
Commonwealth	Green	Black	Red	Yellow	Blue
USA	Green	White	Black	Red	Blue
Australia	Green	Black	Red	White	Blue
Direct Current DC	Green	Black	-	Red	-

* Colour set on request

Ten47

Panel Drain Connectors with rubber caps

Panel Drain Connectors without caps

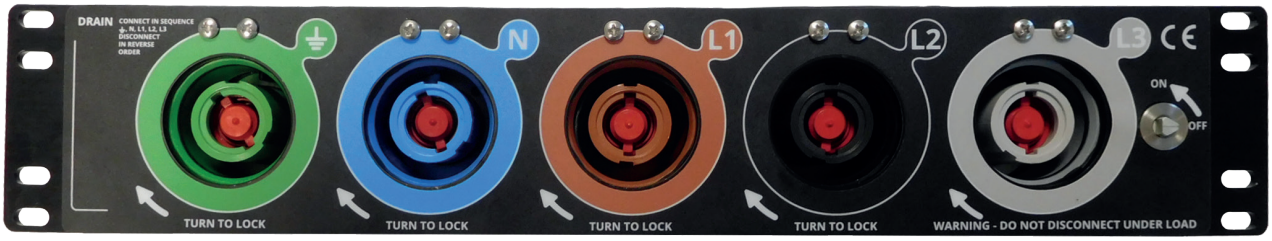

M12 Threaded Hole

750A

M12 Threaded hole, copper contacts

Colour*	Part Number
UK & Europe	PSB-M-7F-EU-C (with caps)
UK & Europe	PSB-M-7F-EU

500A

M12 Threaded hole, brass contacts

Colour*	Part Number
UK & Europe	PSB-M-5F-EU-C (with caps)
UK & Europe	PSB-M-5F-EU-C

* Other variations available (see page 15 for options)

Panel Source Connectors with rubber caps

Panel Source Connectors without caps

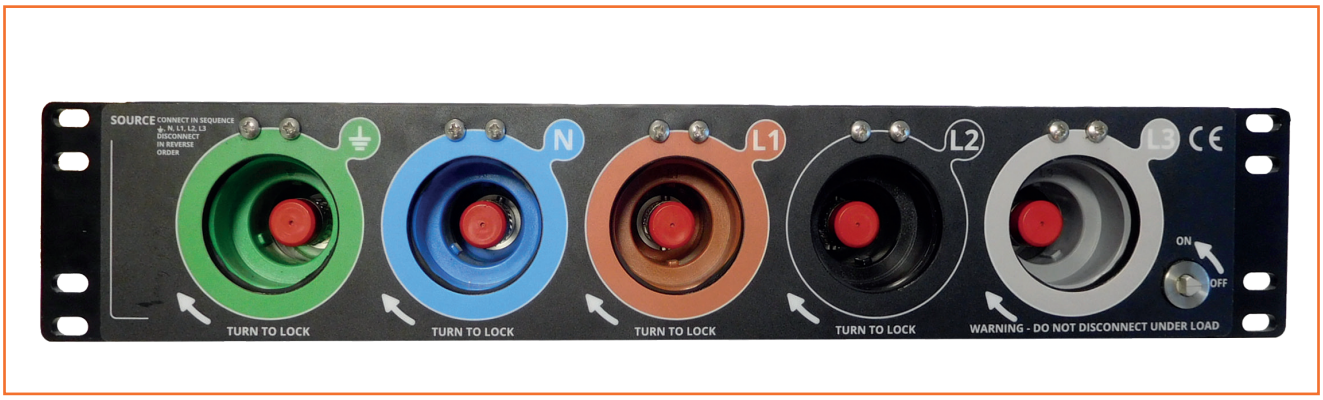

M12 Threaded Hole

750A

M12 Threaded hole, copper contacts

Colour*	Part Number
UK & Europe	PSB-F-7F-EU-C (with caps)
UK & Europe	PSB-F-7F-EU

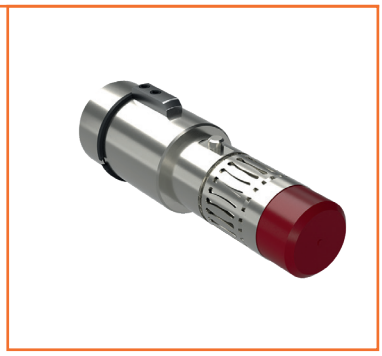

500A

M12 Threaded hole, brass contacts

Colour*	Part Number
UK & Europe	PSB-F-5F-EU-C (with caps)
UK & Europe	PSB-F-5F-EU

* Other variations available (see page 15 for options)

Accessories

Rear Adapter with M40 Cable Gland

Wire section	Part Number
19mm – 28mm	SB-RA-M
22mm – 32mm	SB-RA-OS

Can be used with screw terminal and crimp contacts only

Caps

	Part Number
for S-BOX panel drain	SB-PD-CAP
for S-BOX panel source	SB-PS-CAP

Reference Data for Cable Selection

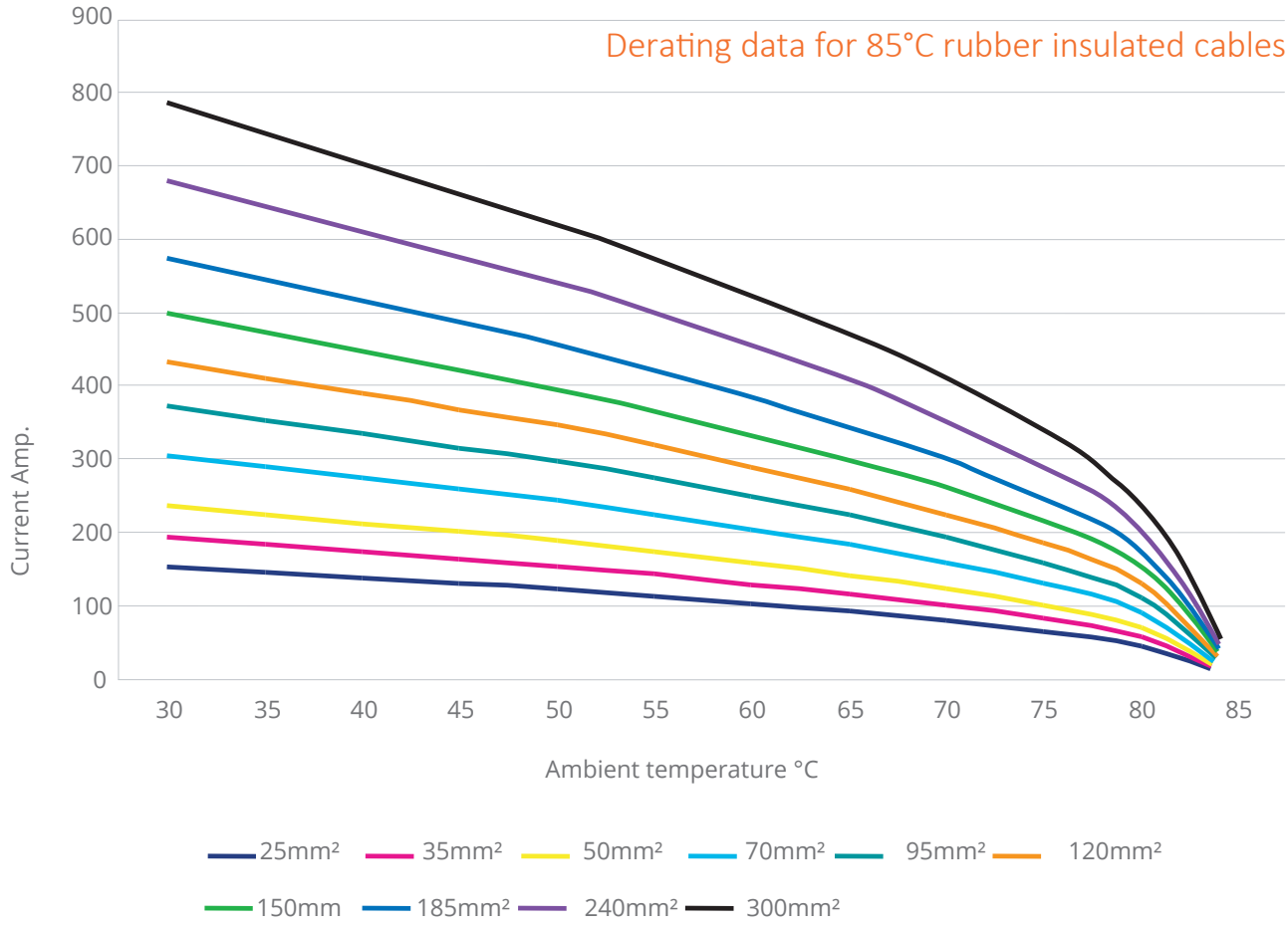

Characteristics	
Screws Tightening Torque (in-line connectors)	12Nm
Panel Contact Tightening Torque	30Nm max
Cable Gland Tightening Torque	13Nm
Minimum Mating Cycles	500
Contact Retention in Insulator	2.5kN Axial Load
Flammability	UL94 V0
Environmental Sealing (when mated)	IP67
Rated Voltage to Earth	2000Vac
Minimum Flashover (EN60309–1)	6.8kV AC – 1 minute
Minimum Insulation Resistance	5GΩ @ 500V
Operating Voltage	1000V AC or DC
Test Voltage (Mated Condition)	5 kV– 1 minute @ 50Hz
Contact Resistance	<0.1mΩ
Short Circuit Current – 1 second	16kA
Short Circuit Current – 3 seconds	12kA
Surge Current (DIN VDE 0102/1.90)	62kA – 10mseconds
Creepage Distance	>25mm
Clearance Distance	>25mm
Temperature Range	-30°C / +125°C

Crimping Tools

It is recommended to apply multiple crimp compressions in accordance with the table below to obtain optimum mechanical and electrical performance.

Use either of the following tools:

- Hand operated crimp tool: HT131-C
- Cordless Hydraulic Crimp Tool: B1300L-CE (recommended)

Due to the numerous cable types available, it is recommended to contact our Customer Service to confirm cable and crimp suitability.

Cable Size	**Up to**	**185mm²**	**240mm²**	**300mm²**	**185mm²**	**240mm²**	**300mm²**
	120mm²	Class 2	Class 2	Class 2	Class 5	Class 5	Class 5
Insulation Strip (dim L)	33mm	40mm	40mm	40mm	40mm	40mm	40mm
Recommended Number of Crimps	N/A (set screw)	2	3	3	2	3	3
Crimp Die Set	N/A	ME48-C	ME60-C	ME60-C	ME48-C	ME60-C	ME60-C
Contact Removal Tool	REM-185P		REM-240P		REM-185P	REM-240P	

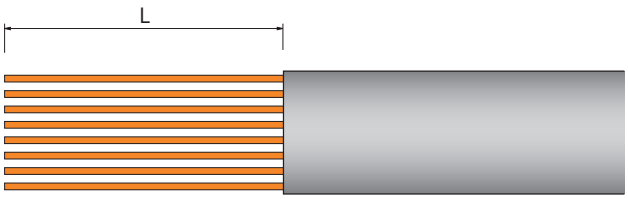

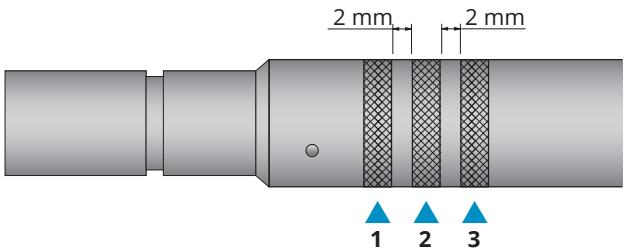

Example: The correct sequence of compressions for 240mm² and 300mm² cable only.

Hand Operated Crimp Tool HT131-C

Cordless Hydraulic Crimp Tool: B1300L-CE

Removal Tool

Type	Part Number
Screw set termination	REM-185P
Crimp contacts	REM-240P

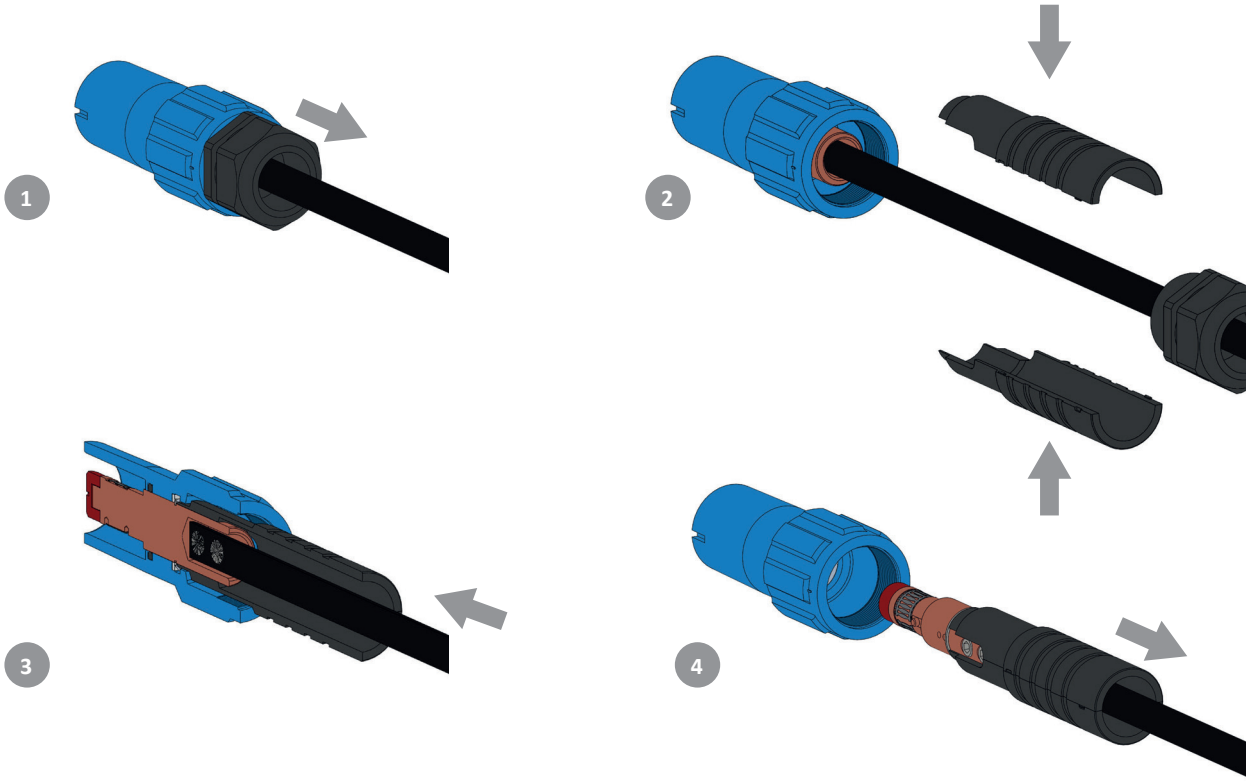

Maintenance

Intervention	Timing/Frequency	
	Daily	Before the use
General visual inspection	●	
Check the legibility of the label	●	
General cleaning		●
Check tightness of screws		●
Check the electrical wiring		●

- General visual inspection: check the general condition of the S-Box for any damage or missing parts.
- Check the legibility of the label: the label must be perfectly legible; it is therefore necessary to keep them clean and ask for a replacement from the person responsible for maintenance if they are illegible.
- General cleaning: cleaning is necessary for accumulation of dust and dirt.
- Cleaning should be done using tools, equipment and detergents or solvents commonly used for cleaning electrical industrial equipment. Periodic greasing of O-ring seals on the connectors is recommended.
- Check tightness of screws: check that the fixing screws to support structure are properly tightened, in particular the four screws joining the connection plate to the frame/panel.
- Check the electrical wiring: regularly check that the electric wiring for the power supply of the S-Box are in perfect condition and that there are not cuts, peeling or other damage.

PACKAGING:

The carton box and internal packing are recyclable and should be disposed of separately.

PACKAGING CONTENTS:

The packaging contains the following components:

QTY	COMPONENTS
1	Sequential Box
3 or 5	SPPC Contacts (according to the number of connectors)
1	Triangular key
1	3 pole M12 cable connector
1	Operating / Maintenance guide

Other Versions

Other versions are supplied on request:

- DC

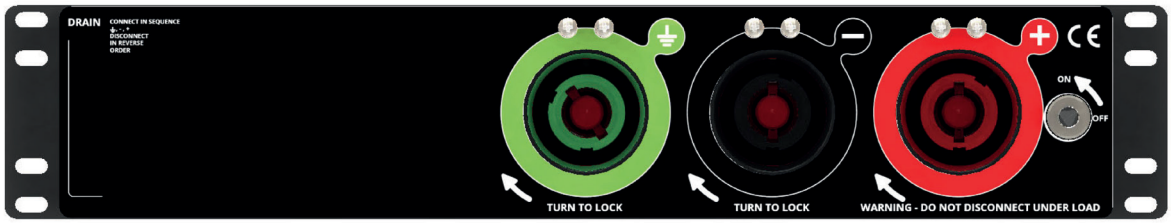

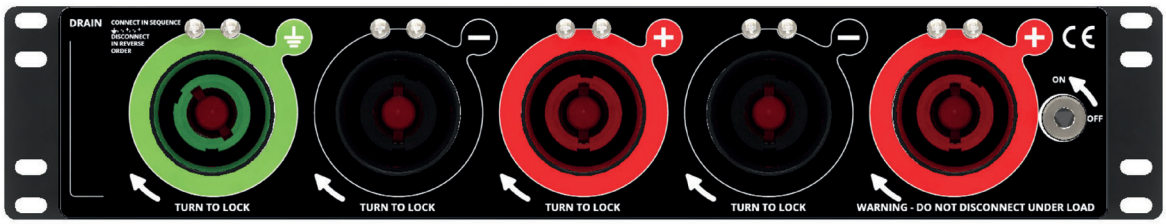

- AC: 3 Poles + Earth

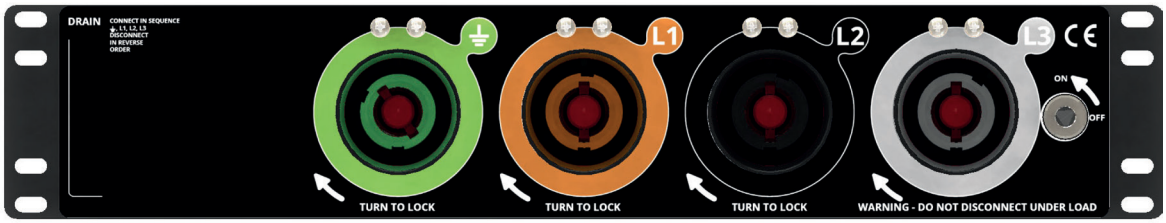

Safety

Information regarding the use of the product within recommended safety limits.

To use the connectors described in this instruction according to the necessary safety requirements we suggest you apply the following criteria:

• Use the connectors and connected cables within their electrical and environmental limits.

• Follow the characteristics of each version and carefully choose the appropriate connector for the required use.

• Make sure to respect the procedures regarding the correct assembly of connectors and the crimping of contacts.

• Any connector damaged during shipment, storage, assembly or use should be replaced.

• Never uncouple the connectors when under power.

• Always protect the parts against shock when the circuit is under power.

• Always check the circuit before putting it under power.

• The user must take final responsibility for electrical safety.

For the instructions concerning assembly and crimping of contacts please consult the appropriate tools manuals.

We recommend to respect the following general rules:

• Always use the tools recommended by Ten 47's catalogue or manuals.

• Use the suggested norms for tool maintenance and calibration.

Consult Ten 47 if in doubt.

DO NOT USE ALTERNATIVE GREASES OR OILS which could damage the Sequential Box and affect the functionality of the connector. Ten47 reserves the right to amend the specifications of this instruction without issuing prior notice.

SAFETY PRECAUTIONS:

Carefully read the safety instructions before using S-Box product.

- Make sure that the current of the cables and connectors being used are suitable for the S-Box current rating.
- The cables must not be connected under voltage.
- Connectors must not be connected or disconnected when live or under load. The voltage power must be switched off before connection/disconnection.
- The contacts must be checked before assembly to ensure there is no damage on them before starting the next assembly step.

The data defined in this document are given as an indication. In the effort to improve our products, we reserve the right to make any change judged necessary.

Unit 2B Frances Industrial Park
Kirkcaldy, Scotland, UK
KY1 2XZ

Tel: +44 (0)1592 655725
Email: sales@ten47.com

www.ten47.com